RESIDENTIAL OVERHEAD SERVICE ENTRANCE INSTALLATION
100-200 AMP, 120/240 VOLT, 3 WIRE, SINGLE PHASE

PROVIDED & INSTALLED BY NOBLE REMC

① 3 CONDUCTOR SERVICE TO HOUSE. SEE NOTE A.

PROVIDED & INSTALLED BY CUSTOMER

② INSULATED BRACKET. SEE NOTE B.

③ METER SOCKET TO BE MOUNTED PLUMB IN ACCESSIBLE LOCATION. SEE NOTE B. AVAILABLE FOR PURCHASE AT NOBLE REMC.

④ 2" GALVANIZED RIGID STEEL CONDUIT ONLY. UPPER 10' SHALL BE WITHOUT COUPLING. SEE NOTE C.

⑤ SERVICE ENTRANCE CONDUCTOR. SEE N.E.C. TABLE BELOW FOR CONDUCTOR SIZE & NOTE B FOR HEIGHT.

⑥ FLASHING.

⑦ 2" X 6" MINIMUM BLOCKING BETWEEN RAFTERS TO PREVENT MOVEMENT.

⑧ WEATHERHEAD. LEAVE 30" MIN. OF 3 CONDUCTORS OUT OF WEATHERHEAD TO FORM RIP LOOP FOR CONNECTING TO SERVICE. IDENTIFY NEUTRAL CONDUCTOR.

⑨ PIPE STRAPS (MIN. OF 2).

⑩ ALTERNATE LOCATION OF SERVICE EQUIPMENT. MAY BE MOUNTED FLUSH. SEE NOTE F.

⑪ IF METALLIC CONDUIT IS USED, GROUNDING BUSHINGS ARE REQUIRED ON BOTH ENDS.

⑫ 2" CONDUIT MAY BE GALVANIZED RIGID STEEL, APPROVED PVC SCHEDULE 80 (ON LOAD SIDE ONLY) OR SERVICE ENTRANCE CABLE. IF STEEL, GROUNDING BUSINGS ON BOTH ENDS. SEE NOTE E.

⑬ USE #6 BARE STRANDED COPPER GROUND WIRE FROM SERVICE EQUIPMENT GROUND BUS TO GROUND ROD. DO NOT ROUTE GROUND WIRE THROUGH METER BASE.

⑭ N.E.C. APPROVED GROUND CLAMP SUITABLE FOR BURIAL.

⑮ 2-NEC APPROVED GROUND RODS (5/8" X 8'). ALLOW A MINIMUM SEPARATION OF 6' BETWEEN RODS.

⑯ GROUND FROM SERVICE EQUIPMENT GROUND BUS TO METALLIC WATER PIPE.

SERVICE RATING	100A	150A	200A
TYPE	RISER	CONDUCTOR	SIZE
CU	#4	1	2/0
AL	#2	2/0	4/0

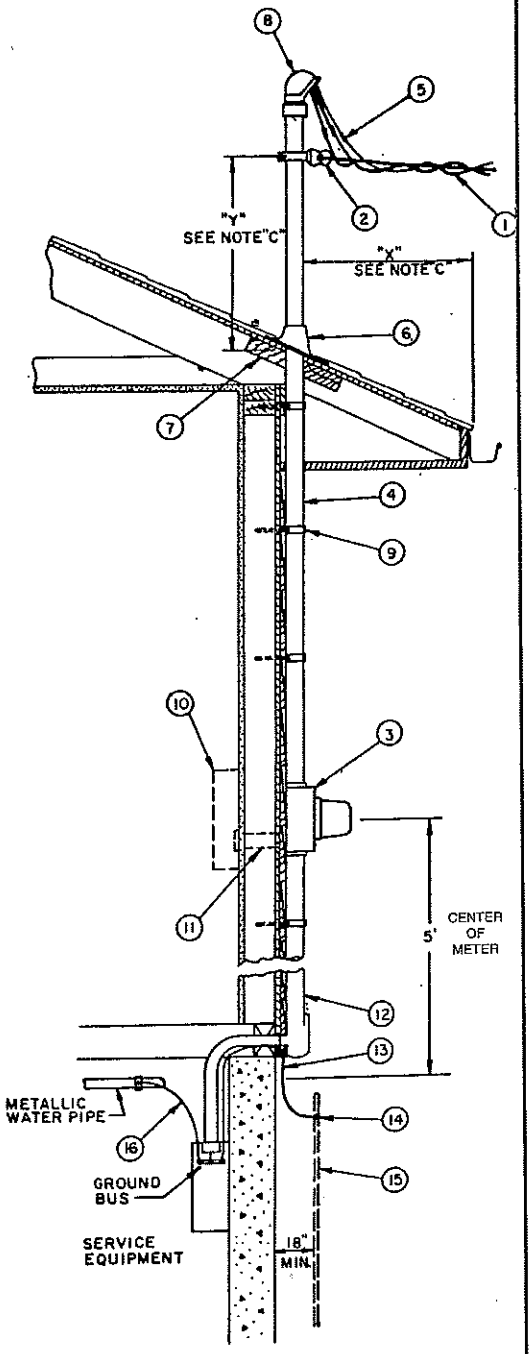

NOTES:

A. SERVICEMAST TO BE USED WHERE ATTACHMENT ON BUILDING WOULD NOT PROVIDE PROPER CLEARANCE ABOVE GROUND FOR REMC SERVICE.

B. LOCATION OF METER & HEIGHT OF SERVICEMAST MUST BE DETERMINED BY NOBLE REMC TO PROVIDE PROPER CLEARANCE FOR REMC SERVICE PER CURRENT NATIONAL ELECTRIC SAFETY CODE. MOUNTING HEIGHT TO BE 5' TO CENTER OF METER.

C. HEIGHT "Y" OF THE SERVICE ATTACHMENT MAY BE A MIN. OF 18" ABOVE THE ROOF LINE IF "X" DIM. IS 4' OR LESS. IF "X" DIM. IS GREATER THAN 4' "Y" IS A MIN. OF 3', IF THE ROOF SLOPE IS 4" IN 12' OR GREATER. IF MORE THAN 3' OF HEIGHT TO ATTACHMENT IS REQUIRED, MAST MUST BE GUYED OR BRACED TO HOLD THE PULL OF REMC SERVICE, PER CURRENT NATIONAL ELECTRIC CODE.

D. ALUMINUM ELECTRICAL JOINT COMPOUND SHALL BE APPLIED TO ALL ALUMINUM CONDUCTORS BEFORE CONNECTIONS ARE MADE.

E. THE CUSTOMER MUST FOLLOW THE CURRENT NATIONAL ELECTRIC CODE & ALL LOCAL CODES.

F. IF METALLIC CONDUIT IS USED FOR GROUND WIRE ENCLOSURE, BOTH ENDS MUST BE BONDED.

Noble REMC
A Touchstone Energy® Cooperative
The power of human connections

260-636-2113 • 800-933-7362

May 2003